Classic Keys EFFECTS SECTION

4 Effects Section

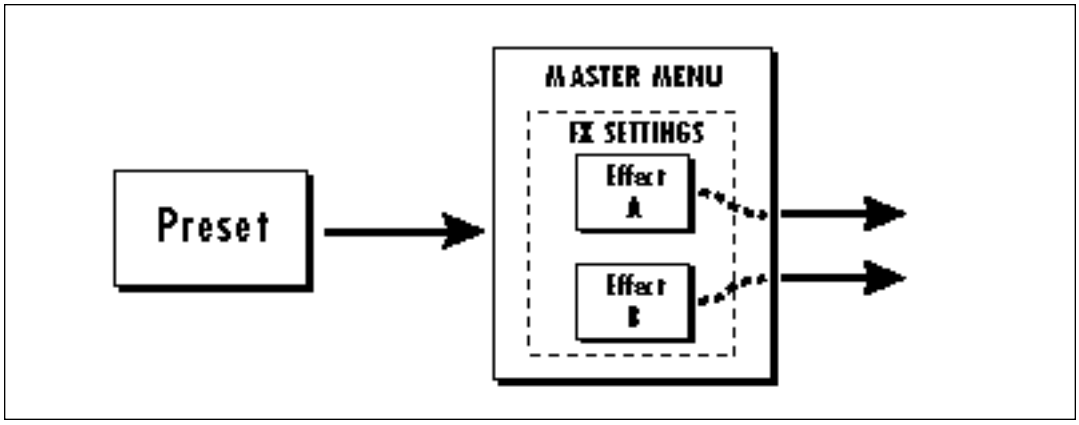

The two effect processors are programmed globally for the entire machine.

EFFECTS BUS ARCHITECTURE

Two separate digital effects processors are included in the Classic Keys. The “A” effect processor includes several types of Reverberation, which is an electronic simulation of a natural space such as a room or hall, as well as Delays, Echoes, Chorusing, Phaser and Flanging effects. The “B” effect processor contains special effects such as a Ring Modulator and two types of Fuzz.

Each effect has its own set of control parameters which are appropriate to that particular effect. For both the A and B effects there is an amount parameter which determines the relative mix of the processed and unprocessed signals (wet/dry mix). The output of the B effect can also be routed back through processor A.

The effect programming is done on a global basis, meaning that the two effects serve the entire machine. This is similar to the way an external effects unit would be connected except that in Classic Keys, the signal path is kept entirely in the digital domain in order to preserve the excellent sound quality.

The choice of which of the two effects is used for a particular sound can be made by MIDI channel or it can be selected per preset.

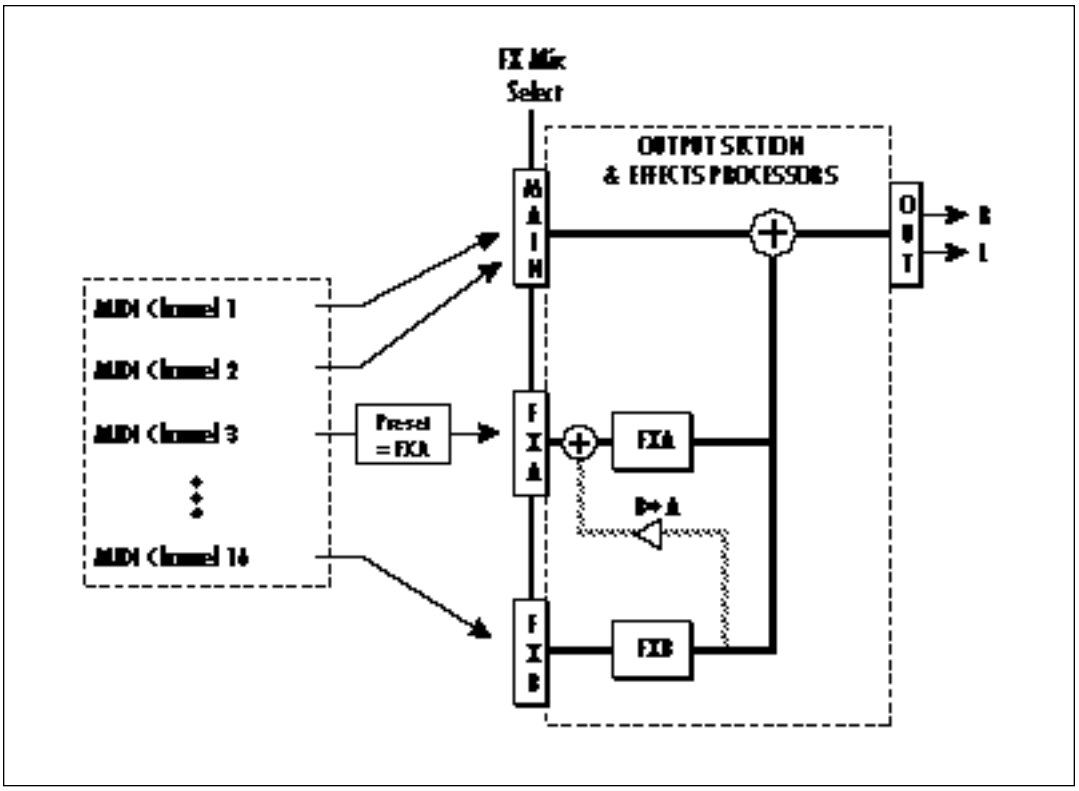

EFFECTS CAN BE STORED AS PART OF A SEQUENCE BY USING "SEND EFFECTS" IN THE MASTER MENU.

EFFECTS OUTPUT ROUTING

The diagram above shows how the effects section is integrated into the output jack routing scheme. The mix bus can be selected either by the preset or by MIDI channel. When "Preset" is selected, the FX MIX SELECT programmed in the preset is used.

EDITED EFFECTS PARAMETERS ARE NOT REMEMBERED WHEN A NEW EFFECT IS SELECTED.

TO PROGRAM AN EFFECT:

1) Press the MASTER button lighting the LED.
2) The first screen in the Master menu is shown below. Select one of the effect processors for each MIDI channel you wish to use (or select "Preset" if you want the selection in the preset to be used), This control selects the input to the effect processors.

```
FX MIX SELECT
channel 01:FxA
```

3) Select the desired effect and program the appropriate parameters.

```
FXA:Echo
L Delay Time 255
```

4) Set the FX Amount for the A or B effect. This adjusts the ratio of effected to un-effected signal. B->A allows you to route the output of effect B through effect A (set the MIX to FxB).

```
FX AMOUNT A:50%
B->A:0%   B:50%
```

5) That's it!

A EFFECTS

ROOM
WARM ROOM
SMALL ROOMS 1 & 2
HALLS 1, 2 & 3
CHAMBERS 1 & 2
PLATES 1 & 2
EARLY REFLECTIONS 1-4
REVERSE EARLY REFLECTIONS
RAIN & SHIMMER
STEREO CHORUS
STEREO FLANGE
PHASER
ECHO
DELAY
CROSS DELAY

B EFFECTS

STEREO CHORUS
STEREO FLANGE
PHASER
DELAY
CROSS DELAY
FUZZ
FUZZ LITE
RING MODULATOR

REVERB

Reverberation is a simulation of a natural space such as a room or hall. The reverb effects in Classic Keys simulate various halls, chambers, rooms and reverberation plates. In addition, there are several other reverb effects such as Early Reflections and Rain. There is only one adjustable parameter on the reverbs - Decay Time. Decay time is the length of time that it takes for the reflected sound from the walls of the room to die away. In general, the larger the room, the longer the decay time.

The diagram below breaks down the reverberated sound into its component parts. After an initial pre-delay period, the echoes from the closest walls or ceiling are heard. These first echoes or the early reflection cluster, vary greatly depending on the type of room. Roughly 20 milliseconds after the reflection cluster, the actual reverberation begins and decays according to the time set by the decay time parameter.

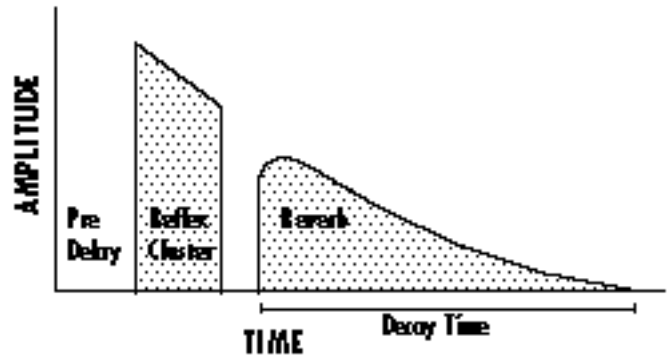

Room programs simulate small rooms with high frequency absorption caused by drapes and furniture.

Plates simulate plate type reverbs with their tight, dense early reflections and sharp reverb build-up.

Chambers simulate medium sized rooms with hard reflective surfaces.

Hall programs recreate the open, spacious ambience of large concert halls.

Early Reflection programs consist of the reflection cluster only without the reverb decay. These effects are similar to a multiple tap delay line and have a single adjustable parameter - Ambience.

The special reverbs Rain & Shimmer are variations of the early reflection programs and consist of a dense group of short echoes followed by longer echoes.

```
FXA:Hall 1
Decay Time: 165
```

Place the cursor underneath the reverb name and use the data entry control to change the type of reverb. Moving the cursor to the lower line allows you to change the decay time of the reverb.The decay times of the reverb programs vary from effect to effect (Rooms: 50-250, Small Rooms: 10-128, Halls: 100-255, Chambers: 50-200, Plate 1: 80-200, Plate 2: 80-250.

The Early Reflection programs have an Ambience parameter which is variable between 0-100. The ambience parameter is a diffusion control which simulates the effect of an irregular wall surface as the amount is increased.

REVERB EFFECTS

Room
A bright, medium sized room. The apparent source position is fairly close to the listener. Suitable for use with 100% wet mix setting for adding ambience.

Warm Room
This reverb is similar to “Room” with more high frequency absorption, slightly larger size and a more distant source position.

Small Room 1
This reverb is also similar to “Room” with shorter initial reflections, shorter decay times and higher reflection density due to the reduced room size. The apparent source position is closer to the listener.

Small Room 2
This reverb is a variation of “Small Room 1” with greater high frequency damping and a more distant source position.

Hall 1
Hall 1 is a large, highly reverberant space with auditorium-like acoustics. Like all the Hall programs, “Hall 1” exhibits a warm, distant ambience with slow reflection density buildup. With the decay parameter set to maximum, “infinite” reverberation effects can be obtained. Adjustment of wet-dry mix can be used to position the listener from the “front row” (≈25%) to “back of the balcony” (≈100%).

Hall 2
This reverb is similar to “Hall 1”, but harder and brighter, with more pronounced slap echoes that come from parallel reflecting surfaces in the room. Hall 2 also exhibits a pronounced reverb “bloom” or late-reflection buildup. A 50% wet mix creates the optimum “close” distance adjustment.

Hall 3
Hall 3 is similar to “Hall 2”, but with larger scale stadium-like acoustics. Hall 3 is warmer than Hall 2 (more high frequency damping) and does not display the obvious early reflections and slap echoes. It also exhibits a distinct predelay of approximately 100 milliseconds and a pronounced late reflection buildup both of which contribute to the impression of a large space. Wet mix values of 10% to 50% are most appropriate, although a setting of 100% produces an effective cave simulation.

Chamber 1
A simulation of a bright, medium-sized chamber reverb or recital hall with hard walls. Early reflections are very prominent, with high reflection density. Moderately long decays are possible at the maximum decay setting.

Chamber 2
Similar to “Chamber 1” but with a much warmer sound. The wet mix adjustment provides an effective control over the apparent source location from close (10%) to very distant (100%).

Plate 1
Simulates a plate reverb unit. Gives a tight, bright, slightly metallic sound. Reflection buildup is very rapid, with high density. Early reflections are minimized.

Plate 2
An effect similar to Plate 1, but slightly warmer with less density.

EARLY REFLECTION GROUP

Early Reflection 1

Early Reflection 2

Early Reflection 3

Early Reflection 4

All Early Reflection programs have a single Ambience parameter which adds diffusion to the individual reflections. Lower ambience settings cause reflections to become more discrete, simulating harder reflecting surfaces. The early reflection programs are simulations of increasingly large acoustic spaces, from a small studio (Early Refl 1) to a large room like a sound stage (Early Refl 4). The wet mix control acts effectively as source distance control. In general, lower mix amounts are more effective as the room size increases.

Reverse Early Reflection
More of a special effect than an acoustic simulation, Reverse ER contains a set of exponentially increasing delay taps, creating a kind of “zip” sound at low Ambience settings. At maximum ambience and lower wet mix values, the sound is more authentically acoustic, with a long, delayed reflection “bloom”. The effect is similar to a large but well damped parking garage.

SPECIAL REVERBS

These special reverbs all have a single Decay Time parameter.

Rain

Similar to a repeating delay, but with complex spatial and filtering effects occurring across the stereo panorama. The effect on percussive sounds might be likened to a bucket of marbles raining down on a galvanized steel roof.

Shimmer

Distantly related to the Rain effect, Shimmer causes input signals to be progressively diffused in time and space across the stereo panorama. The spatial diffusion is accompanied by a flanging effect. The program is highly responsive to left or right-panned inputs. A stunning special effect with percussive sounds, especially through headphones.

STEREO CHORUS

The function of a chorus device is to thicken the sound or to make one voice sound like many. The way the effect is achieved is by mixing one or more delayed versions of the signal in with the original. The delay times used are too short to be perceived as an echo, but long enough so that comb filtering does not occur. In addition, the delay time is varied to simulate the random differences which occur when multiple instruments are playing together. A slight amount of feedback improves the effect by creating multiple images of the sound as it recirculates again and again. The delay times are slightly different for each channel and the LFO phase is inverted on the right channel to help contribute to the overall chorus effect. The LFO Rate and Depth settings are critical to achieving a realistic effect with faster LFO Rates generally requiring less LFO Amount and vice-versa.

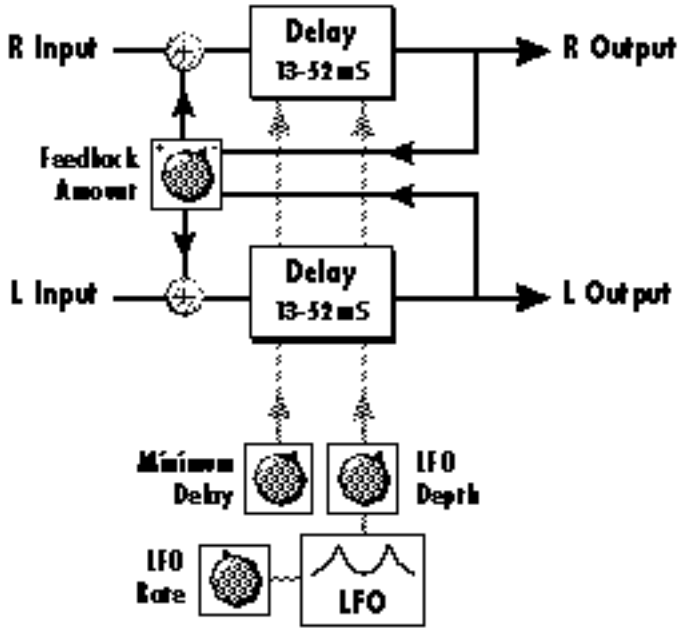

STEREO (

The stereo chorus in the Classic Keys is very similar to the stereo flanger except that the delay time is longer. The delay times for the stereo chorus range from 13 milliseconds to 52 milliseconds, compared with the 26 microsecond to 6.5 millisecond range of the flanger.

```
FXA:StereoChorus
LFO Rate     050
```

```
FXA:StereoChorus
LFO Depth    050
```

```
FXA:StereoChorus
Min Delay    036
```

```
FXA:StereoChorus
Feedback    +100
```

STEREO FLANGER

A flanger consists of a short audio delay line whose output is mixed together with the original signal. Mixing the delayed and original signals together results in multiple frequency cancellations creating a comb filter effect as shown in the diagram below. Since the flanger is a type of filter, it works best with harmonically rich sounds such as strings.

The flanging effect was originally created using two tape recorders playing identical recordings. By exactly synchronizing the two decks and then slowing the speed of one by grasping the tape reel flanges, the flanging effect was born.

The flanger in the Classic Keys is a stereo device consisting of two separate delay lines controlled by a single set of controls. The block diagram of the flanger is shown on the following page.

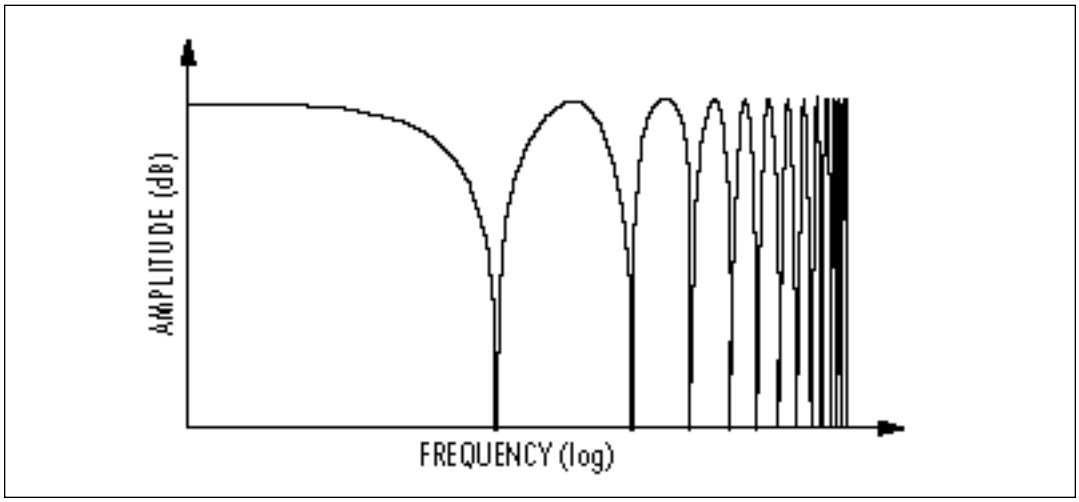

Adding the original signal together with a slightly delayed version creates multiple cancellations in the output signal called “comb filtering”.

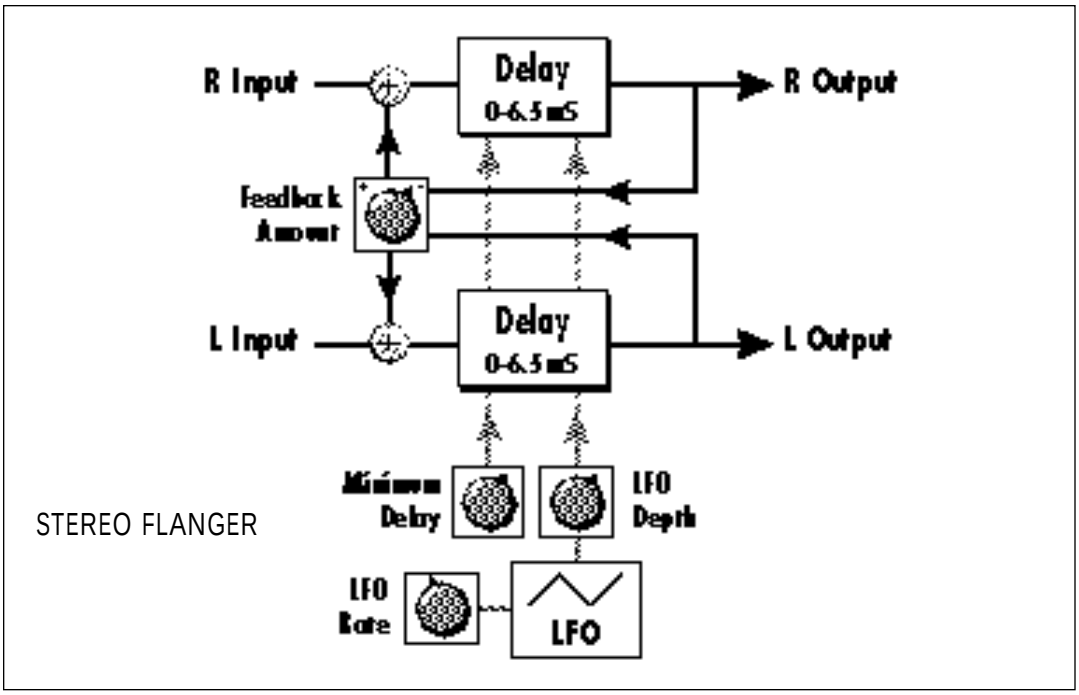

STEREO FLANGER

A Minimum Delay control serves to tune the flanger. In other words, it adjusts the placement of the comb filter notches. The initial delay is variable from 26 microseconds to 6.5 milliseconds.

```
FXA:StereoFlange
Min Delay    100
```

A Low Frequency Oscillator (LFO) varies this initial delay setting, changing the frequency of the notches and adding animation to the sound. The LFO Rate controls the rate of change and the LFO Depth controls how much the delay is changed by the LFO. The LFO adds to the initial delay time so that with LFO Depth set to 255 the maximum delay time is 13 milliseconds.

```
FXA:StereoFlange
LFO Rate     038
```

```
FXA:StereoFlange
LFO Depth    150
```

The Feedback control sends some of the delayed signal through the delay line again. When positive feedback is used (values +1 to +127), the comb filter notches are deepened; when negative feedback is used (values -1 to -127) resonant peaks are formed between the notches which increase with the amount of negative feedback.

```
FXA:StereoFlange
Feedback    -127
```

STEREO PHASER

The stereo phaser is an effect similar to the flanger although much more subtle. The phaser creates a swirly animation when used with harmonically rich sounds such as strings and voices. It can also be used like a chorus to thicken-up a thin sound.

Use the Minimum Frequency control to "tune" the resonant frequencies of the peaks and notches to the sound. The LFO Depth controls the amount of animation that the effect will add. Feedback controls the depth of the peaks and notches.

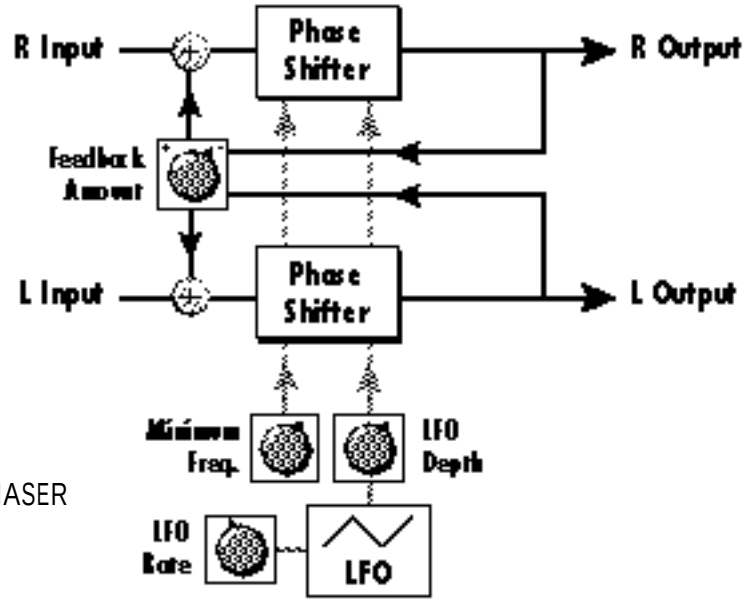

STEREO PHASER

```
FXA:Phaser
Lfo Rate      060
```

```
FXA:Phaser
Min Freq      001
```

```
FXA:Phaser
Lfo Depth     015
```

```
FXA:Phaser
Feedback      060
```

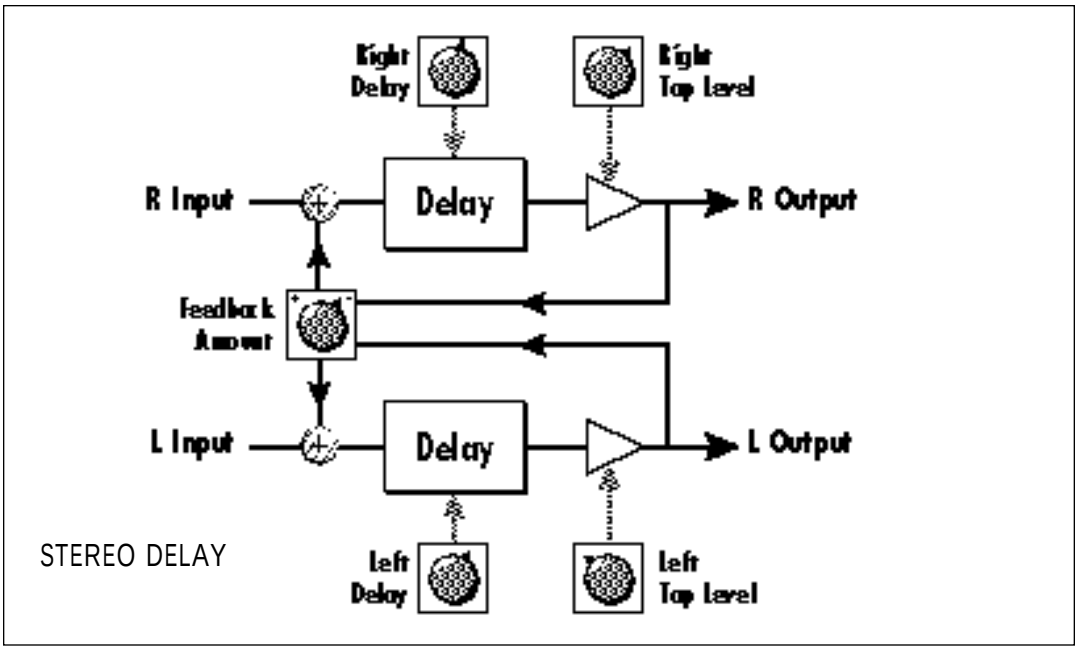

STEREO DELAY

DELAY

The delay line is a stereo effect which can be used for doubling, echoes or fixed formant comb filtering with completely independent delay time and tap levels for the left and right sides. The delay is shown in the diagram above.

The Delay Time parameter is independently variable from 0 to 209 milliseconds for both the left and right channels. The Tap Level parameters control the amount of signal from the left and right delays as well as how much signal from each is supplied to the feedback control. Feedback controls how many echoes are produced. A setting of 0 produces only one echo. The delay line is incredibly stable even with large amounts of feedback. This quality allows the delay line to be used as a resonator, where it acts as a kind of oscillator when excited by an input signal. Infinite delay effects are also possible without the risk of runaway. The stereo delay can function as two independent delay lines by panning the primary and secondary instruments to the extreme left and right.

```
FXA:Delay
R DelayTime   060
```

```
FXA:Delay
R Tap Level   055
```

```
FXA:Delay
L DelayTime   255
```

```
FXA:Delay
L Tap Level   120
```

```
FXA:Delay
Feedback      120
```

CROSS DELAY

Cross Delay is identical to the normal delay line except that the output paths and the feedback paths cross over to the opposite channel in order to produce a ping-pong type of effect when reproduced in stereo. Delay time is adjustable from 0 to 209 milliseconds. The Cross Delay is shown in the diagram below.

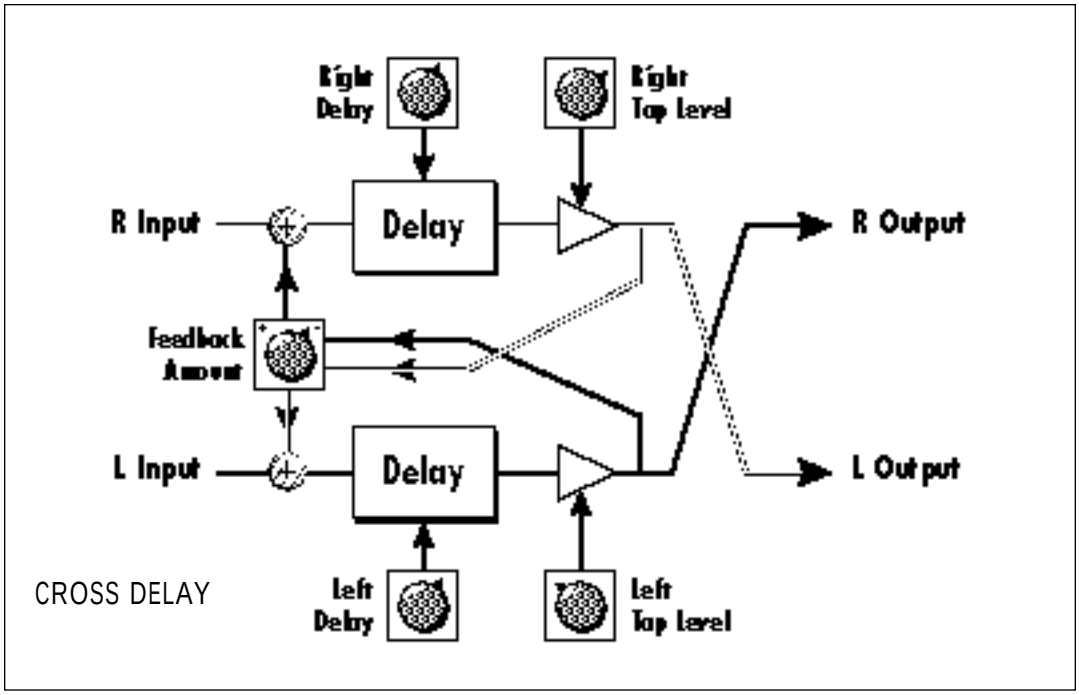

CROSS DELAY

```
FXA:Cross Delay
R DelayTime   060
```

```
FXA:Cross Delay
L Tap Level   120
```

```
FXA:Cross Delay
R Tap Level   055
```

```
FXA:Cross Delay
Feedback    120
```

```
FXA:Cross Delay
L DelayTime   255
```

ECHO

The Echo produces echoes up to 400 milliseconds in length (twice that of the Delay and Cross Delay effects). The feedback path is independent of the output level and utilizes a high frequency damping (low pass filter) control which can simulate traditional analog tape echo. Because the left and right delay controls are completely independent (0-400 mS) they be adjusted to create very interesting stereo echo effects.

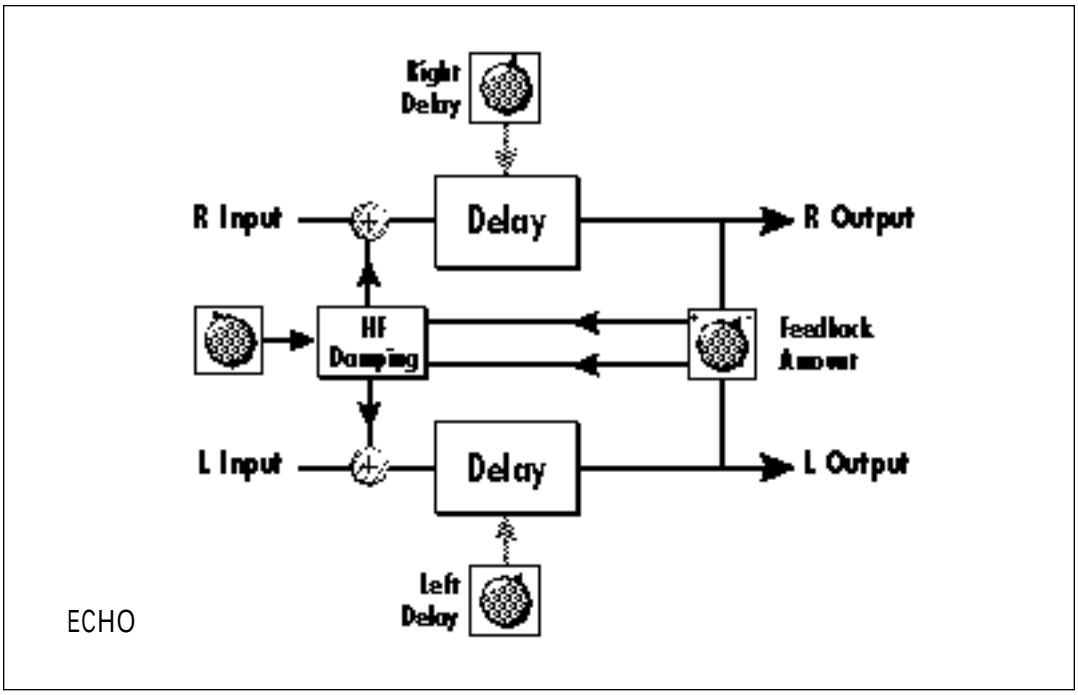

ECHO

```
FXA:Echo
Feedback        100
```

```
FXA:Echo
R DelayTime     100
```

```
FXA:Echo
L DelayTime     255
```

```
FXA:Echo
HF Damping      010
```

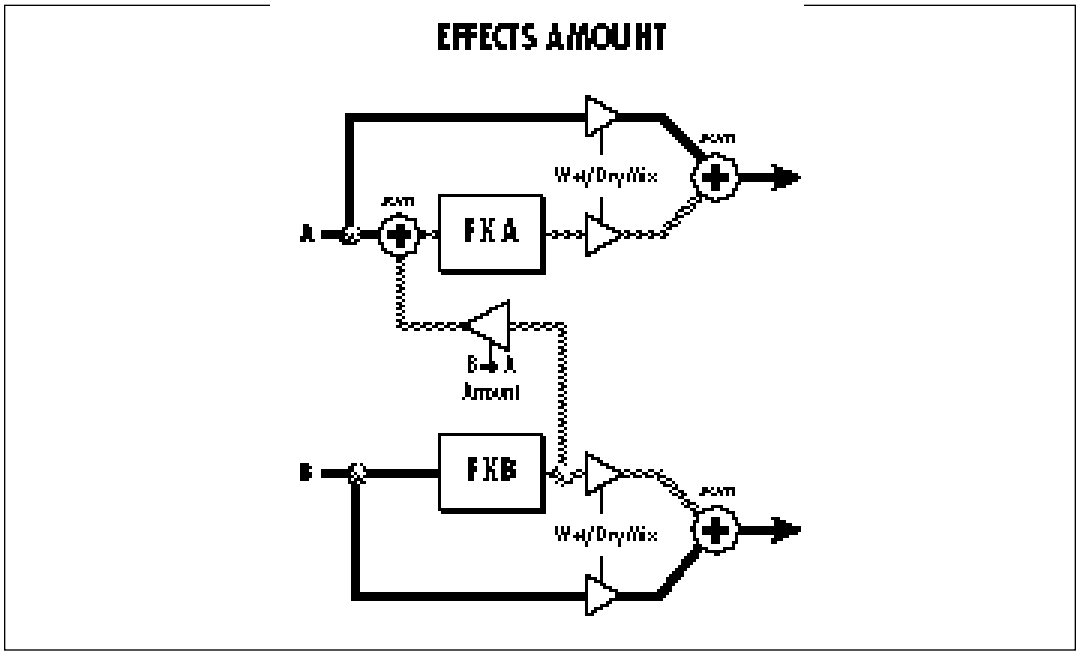

B EFFECTS

The B effects include Stereo Flanger, Stereo Chorus, Phaser, Fuzz, Ring Modulator, Delay, Cross Delay and Fuzz Lite. Some of the B effects such as the Fuzz and the Ring Modulator are a bit bizarre (you won't want to use them on every sound), but can be used to create some truly amazing effects. The B effects can additionally be routed through the A effect as shown in the diagram above. Simple effects such as Fuzz can take on a completely new character when routed through a Reverb.

STEREO DELAY B

The B Delay is identical to the delay line in the A effect group except that the maximum delay time is 104 milliseconds (instead of 209 milliseconds). This delay is useful for short echoes, slapback and doubling effects, as well as for fixed formant comb filtering. Like Stereo Delay A, the feedback parameter is extremely stable even with high amounts, making it useful as a resonator for "infinite" delays.

STEREO CROSS DELAY B

The B Cross Delay is identical to the cross delay line in the A effect group except that the maximum delay time is 104 milliseconds (instead of 209 mS). This delay is useful for short ping-pong echoes, stereo slapback and doubling effects.

STEREO FUZZ

The Stereo Fuzz introduces a controlled distortion to any signal passing through it. Distortion creates harmonics by clipping the top of the wave when it exceeds a certain level. Sine waves are transformed into square waves and complex waves take on noise-like qualities. There are two types of fuzz in Classic Keys: Fuzz and Fuzz Lite.

FUZZ

This Fuzz is probably the "grungiest" fuzz you have ever heard. Two filters, one at the input and one at the output of the fuzz, allow you to control the amount and type of harmonics added to the sound. The Input Filter controls the amount of harmonics produced by the fuzz and the Output Filter removes harmonics at the output, smoothing the sound. Higher values allow more harmonics to pass. The level of the input sound greatly affects the amount of fuzz, so that Classic Keys' envelopes can now control harmonic content as well as the volume. Output Volume sets the output level of the fuzz. There are two complete fuzz effects, controlled by the same set of controls as shown in the diagram below.

Two independent sounds can be processed by panning primary and secondary to opposite sides, or a single sound can be routed through both sides. If a single sound is panned slightly off center, the fuzz will act slightly differently on each side because of the difference in level.

FUZZ LITE

This is a more restrained type of fuzz utilizing "soft-clipping." As the level increases, the waveform through Fuzz Lite becomes somewhat squared. As signal level is increased further, it transforms into a square wave. There is no Output Volume control on Fuzz Lite.

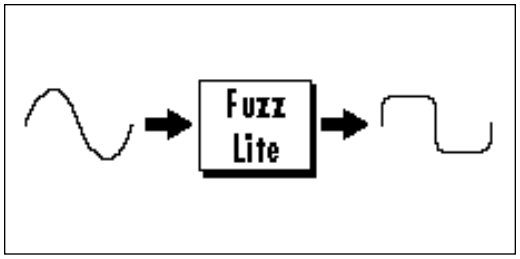

Experiment with the way the input and output filters work on the sound. Fuzz is a specialized effect, not for every situation, but another powerful tool in your musical arsenal.

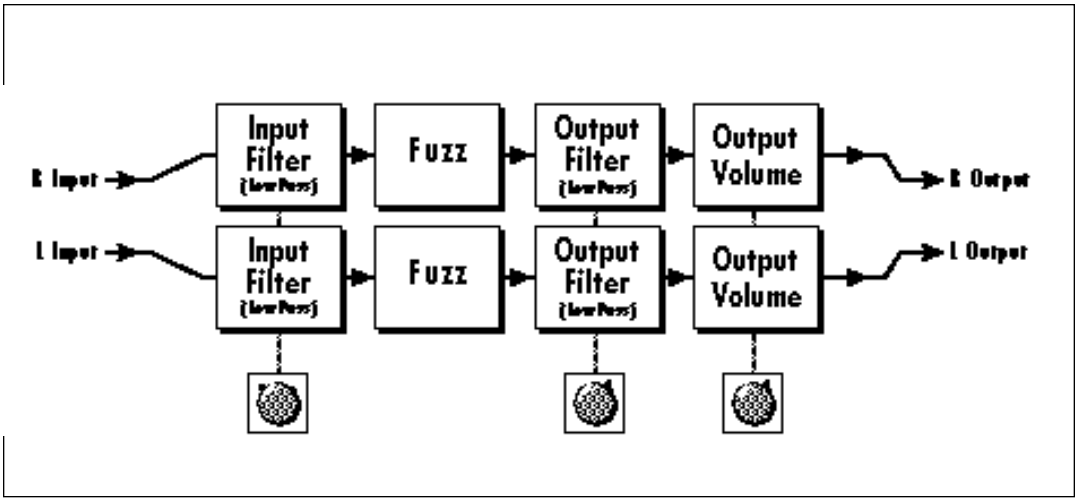

RING MODULATOR

A Ring Modulator is a device which takes two signals and multiplies them together into one resultant signal containing only the sum and difference frequencies of the two input waves. The original frequencies are not output! However, every harmonic of each signal multiplies every other, according to its amplitude. As a result, ring modulators tend to generate a lot of non-harmonic frequencies which can sound very bell-like or out of tune.

There are no controls on the ring modulator as shown by the block diagram below. The left and right outputs are simply multiplied together to form a monophonic output.

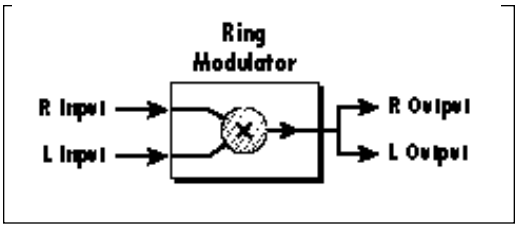

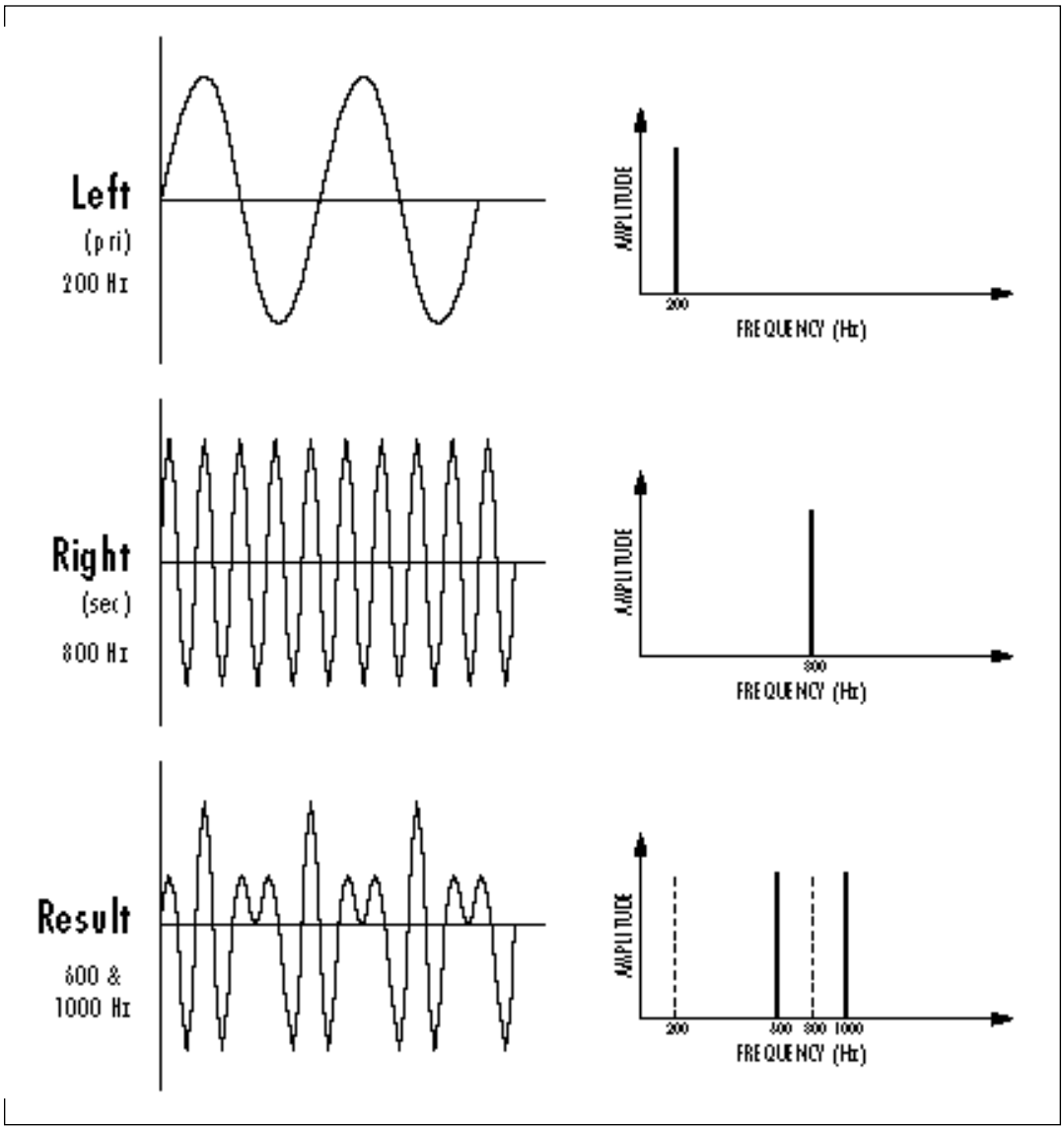

This diagram shows the result of Ring Modulating two sine waves with frequencies of 800 Hz and 200 Hz. Only the Sum and Difference frequencies of 1000 Hz and 600 Hz will result.

By routing the preset (or MIDI channel) to effect B and panning to opposite sides (shown below), two different waves can be ring modulated. Ring modulation works well with simple waves such as sine waves and the harmonic waveforms. Also, try complex waves modulated with sine waves. (Play chords!) Complex waveforms tend to sound rather noise-like.

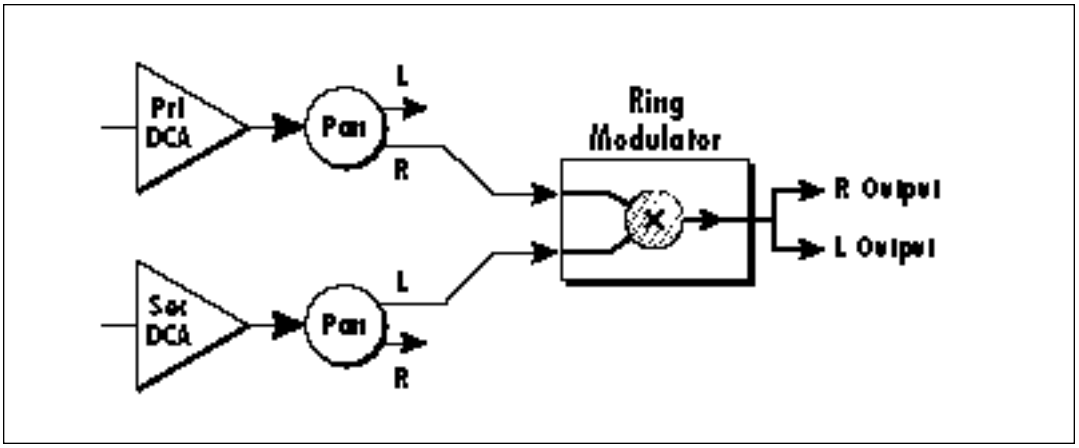

Pan the primary and secondary instruments to left and right in the pan screen and then move to the Effect B screen and select Ring Modulator. There are no parameters to adjust in this effect so the lower line of the display always reads: None.

```
FXB:RingModulate
None          ---
```